SUBMITTAL

Project

DRY BAR

Date

Friday, May 5, 2023

6T HI-HT SND ST

Tag Cover Sheet
Unit Report
Certified Drawing
Performance Report

Unit Report For 6T HI-HT SND ST

Project: DRY BAR 05/05/2023
Prepared By: 12:16PM

Unit Parameters

Unit Model: **48FCFM07A1A5-0A0A0**
Unit Size: **07 (6 Tons)**
Volts-Phase-Hertz: **208-3-60**
Heating Type: **Gas**
Heat Control: **High Heat**
Duct Cfg: **Vertical Supply / Vertical Return**
DX Options: **Single Circuit, Two Stage Cooling (07 only)**

Dimensions (ft. in.) & Weight (lb.) ***

Unit Length: **6' 2.375"**
Unit Width: **3' 10.625"**
Unit Height: **3' 5.375"**
Total Operating Weight: **625** lb

*** Weights and Dimensions are approximate. Weight does not include unit packaging. Approximate dimensions are provided primarily for shipping purposes. For exact dimensions and weights, refer to appropriate product data catalog.

Lines and Filters

Gas Line Size: **1/2**
Condensate Drain Line Size: **3/4**
Return Air Filter Type: **Throwaway**
Return Air Filter Quantity: **4**
Return Air Filter Size: **16 x 16 x 2**

Selection includes construction throwaway filter into the base fan curve.

Unit Configuration

Direct Drive - EcoBlue - Standard Static
Al/Cu - Al/Cu
Base Electromechanical Controls
Standard Packaging

Warranty Information

1-Year parts(std.)
5-Year compressor parts(std.)
10-Year heat exchanger - Aluminized(std.)

No optional warranties were selected.

NOTE: Please see Warranty Catalog 500-089 for explanation of policies and ordering methods.

Ordering Information

Part Number	Description	Quantity
48FCFM07A1A5-0A0A0	Rooftop Unit	1
	Base Unit	
	None	

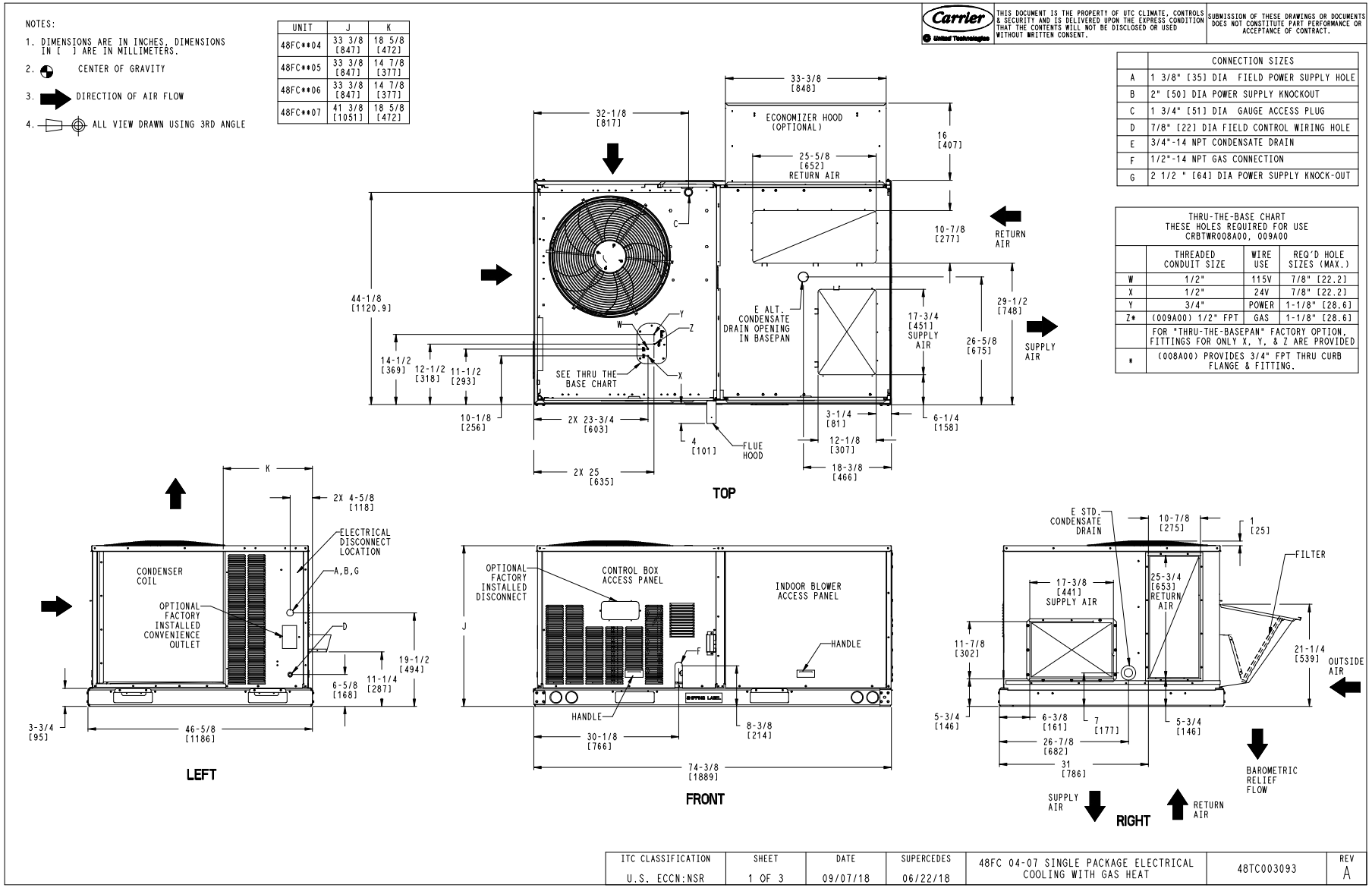
NOTES:
1. DIMENSIONS ARE IN INCHES, DIMENSIONS IN [ ] ARE IN MILLIMETERS.
2. CENTER OF GRAVITY
3. DIRECTION OF AIR FLOW
4. ALL VIEW DRAWN USING 3RD ANGLE
UNIT | J | K
48FC**04 | 33 3/8 [847] | 18 5/8 [472]
48FC**05 | 33 3/8 [847] | 14 7/8 [377]
48FC**06 | 33 3/8 [847] | 14 7/8 [377]
48FC**07 | 41 3/8 [1051] | 18 5/8 [472]
Carrier
THIS DOCUMENT IS THE PROPERTY OF UTC CLIMATE, CONTROLS & SECURITY AND IS DELIVERED UPON THE EXPRESS CONDITION THAT THE CONTENTS WILL NOT BE DISCLOSED OR USED WITHOUT WRITTEN CONSENT.
SUBMISSION OF THESE DRAWINGS OR DOCUMENTS DOES NOT CONSTITUTE PART PERFORMANCE OR ACCEPTANCE OF CONTRACT.
CONNECTION SIZES
A | 1 3/8" [35] DIA FIELD POWER SUPPLY HOLE
B | 2" [50] DIA POWER SUPPLY KNOCKOUT
C | 1 3/4" [51] DIA GAUGE ACCESS PLUG
D | 7/8" [22] DIA FIELD CONTROL WIRING HOLE
E | 3/4"-14 NPT CONDENSATE DRAIN
F | 1/2"-14 NPT GAS CONNECTION
G | 2 1/2 " [64] DIA POWER SUPPLY KNOCK-OUT
THRU-THE-BASE CHART
THESE HOLES REQUIRED FOR USE CRBTWR008A00, 009A00
THREADED CONDUIT SIZE | WIRE USE | REQ'D HOLE SIZES (MAX.)
W | 1/2" | 115V | 7/8" [22.2]
X | 1/2" | 24V | 7/8" [22.2]
Y | 3/4" | POWER | 1-1/8" [28.6]
Z* | (009A00) 1/2" FPT | GAS | 1-1/8" [28.6]
FOR "THRU-THE-BASEPAN" FACTORY OPTION, FITTINGS FOR ONLY X, Y, & Z ARE PROVIDED
* (008A00) PROVIDES 3/4" FPT THRU CURB FLANGE & FITTING.
33-3/8 [848]
32-1/8 [817]
ECONOMIZER HOOD (OPTIONAL)
16 [407]
25-5/8 [652] RETURN AIR
10-7/8 [277]
RETURN AIR
44-1/8 [1120.9]
E ALT. CONDENSATE DRAIN OPENING IN BASEPAN
17-3/4 [451] SUPPLY AIR
29-1/2 [748]
26-5/8 [675]
SUPPLY AIR
14-1/2 [369]
12-1/2 [318]
11-1/2 [293]
SEE THRU THE BASE CHART
10-1/8 [256]
2X 23-3/4 [603]
4 [101]
FLUE HOOD
3-1/4 [81]
12-1/8 [307]
6-1/4 [158]
18-3/8 [466]
2X 25 [635]
TOP
K
2X 4-5/8 [118]
ELECTRICAL DISCONNECT LOCATION
A,B,G
CONDENSER COIL
OPTIONAL FACTORY INSTALLED CONVENIENCE OUTLET
D
19-1/2 [494]
6-5/8 [168]
11-1/4 [287]
3-3/4 [95]
46-5/8 [1186]
LEFT
OPTIONAL FACTORY INSTALLED DISCONNECT
CONTROL BOX ACCESS PANEL
INDOOR BLOWER ACCESS PANEL
J
HANDLE
F
HANDLE
30-1/8 [766]
8-3/8 [214]
74-3/8 [1889]
FRONT
E STD. CONDENSATE DRAIN
10-7/8 [275]
1 [25]
FILTER
17-3/8 [441] SUPPLY AIR
25-3/4 [653] RETURN AIR
11-7/8 [302]
21-1/4 [539]
OUTSIDE AIR
5-3/4 [146]
6-3/8 [161]
7 [177]
5-3/4 [146]
26-7/8 [682]
31 [786]
BAROMETRIC RELIEF FLOW
SUPPLY AIR
RETURN AIR
RIGHT
ITC CLASSIFICATION: U.S. ECCN:NSR
SHEET: 1 OF 3
DATE: 09/07/18
SUPERCEDES: 06/22/18
48FC 04-07 SINGLE PACKAGE ELECTRICAL COOLING WITH GAS HEAT
48TC003093
REV: A

UNIT	STD. UNIT WEIGHT *		CORNER WEIGHT (A)		CORNER WEIGHT (B)		CORNER WEIGHT (C)		CORNER WEIGHT (D)		C.G.		HEIGHT
	LBS.	KG.	LBS.	KG.	LBS.	KG.	LBS.	KG.	LBS.	KG.	X	Y	Z
48FC**04	482	219	113	51	116	53	128	58	125	57	37 5/8 [956]	24 9/16 [624]	18 1/4 [464]
48FC**05	543	246	138	63	133	60	133	60	138	63	36 1/2 [927]	23 3/8 [594]	18 [457]
48FC**06	556	252	142	64	136	62	136	62	142	64	36 1/2 [927]	23 3/8 [594]	18 [457]
48FC**07	607	275	162	73	152	69	141	64	151	68	36 [914]	22 1/2 [572]	19 3/8 [492]

* STANDARD UNIT WEIGHT IS WITH LOW GAS HEAT AND WITHOUT PACKAGING.
FOR OTHER OPTIONS AND ACCESSORIES, REFER TO THE PRODUCT DATA CATALOG.

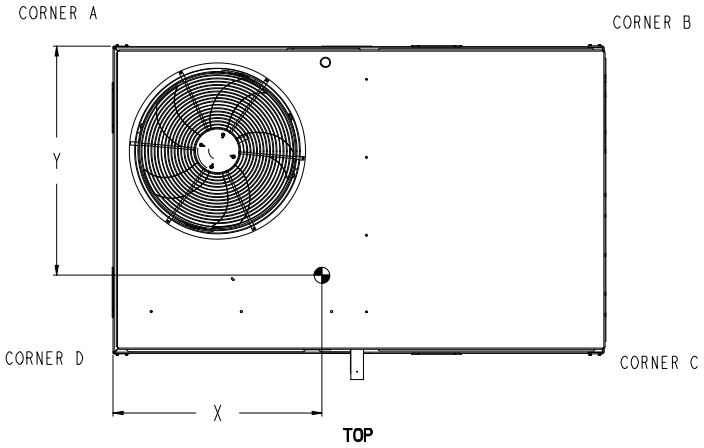

TOP

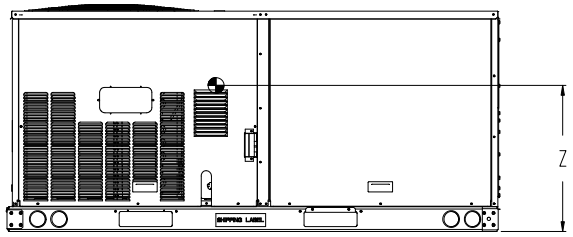

FRONT

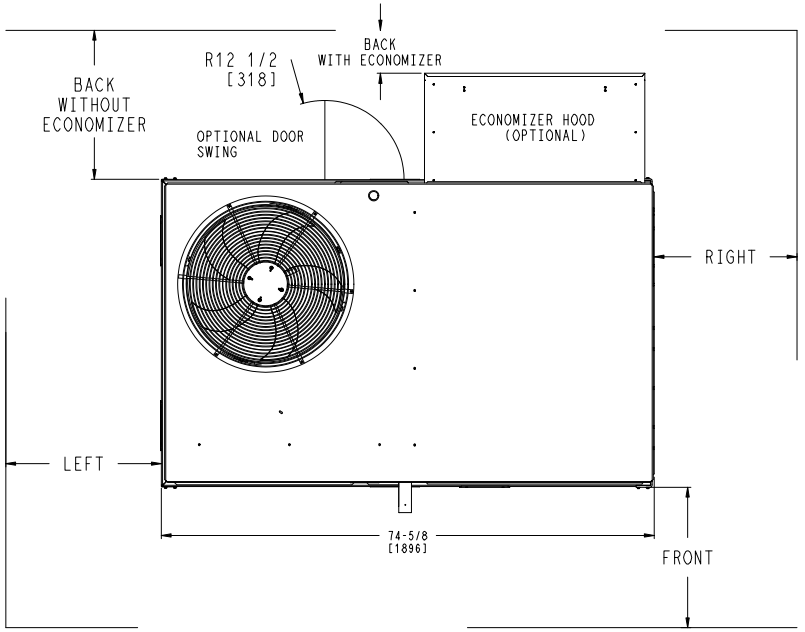

NOTES:

1. FOR ALL MINIMUM CLEARANCES LOCAL CODES OR JURISDICTIONS MAY PREVAIL.

	CLEARANCE		
	SERVICE WITH:	SERVICE WITH:	OPERATING
SURFACE	CONDUCTIVE BARRIER	NONCONDUCTIVE BARRIER	CLEARANCE
FRONT	48 [1219mm]	36 [914mm]	18 [457mm]
LEFT	48 [1219mm]	42 [1067mm]	18 [457mm]
BACK	48 [1219mm]	42 [1067mm]	18 [457mm]
BACK W/HOOD	36 [914mm]	36 [914mm]	18 [457mm]
RIGHT	36 [914mm]	36 [914mm]	18 [457mm]
TOP	72 [1829mm]	72 [1829mm]	72 [1829mm]

THIS DOCUMENT IS THE PROPERTY OF UTC CLIMATE, CONTROLS & SECURITY AND IS DELIVERED UPON THE EXPRESS CONDITION THAT THE CONTENTS WILL NOT BE DISCLOSED OR USED WITHOUT WRITTEN CONSENT.

SUBMISSION OF THESE DRAWINGS OR DOCUMENTS DOES NOT CONSTITUTE PART PERFORMANCE OR ACCEPTANCE OF CONTRACT.

ITC CLASSIFICATION	SHEET	DATE	SUPERCEDES			REV
U.S. ECCN:NSR	2 OF 3	09/07/18	06/22/18	48FC 04-07 SINGLE PACKAGE ELECTRICAL COOLING WITH GAS HEAT	48TC003093	A

Carrier
© United Technologies

THIS DOCUMENT IS THE PROPERTY OF UTC CLIMATE, CONTROLS & SECURITY AND IS DELIVERED UPON THE EXPRESS CONDITION THAT THE CONTENTS WILL NOT BE DISCLOSED OR USED WITHOUT WRITTEN CONSENT.

SUBMISSION OF THESE DRAWINGS OR DOCUMENTS DOES NOT CONSTITUTE PART PERFORMANCE OR ACCEPTANCE OF CONTRACT.

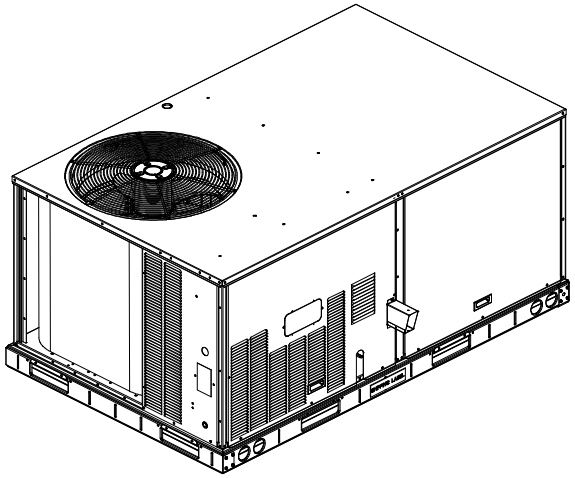

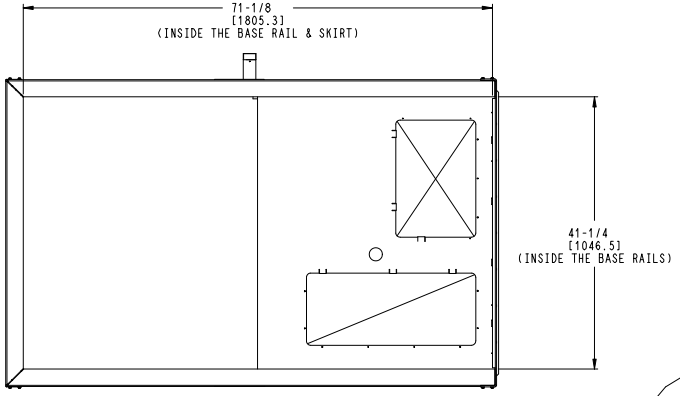

INSIDE BASERAIL DIMENSIONS

BOTTOM

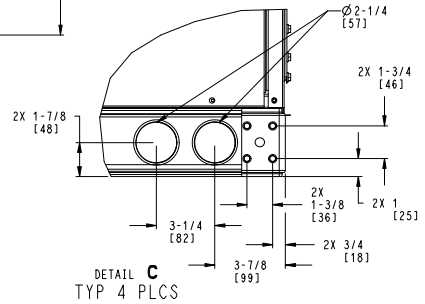

DETAIL **C**
TYP 4 PLCS

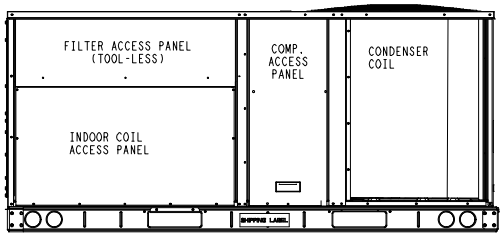

BACK

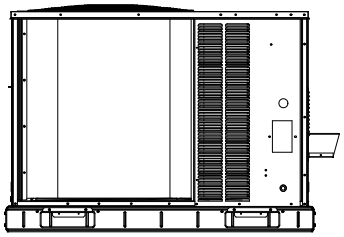

LEFT

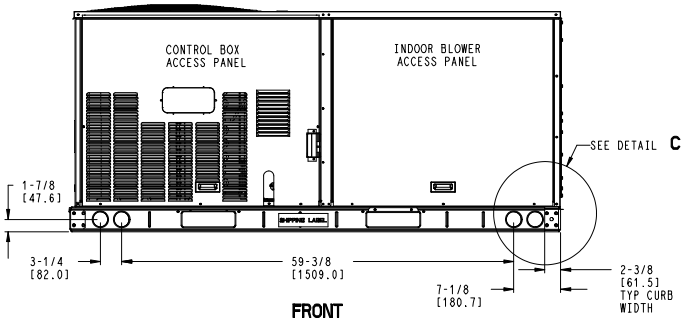

FRONT

ITC CLASSIFICATION	SHEET	DATE	SUPERCEDES			REV
U.S. ECCN:NSR	3 OF 3	09/07/18	06/22/18	48FC 04-07 SINGLE PACKAGE ELECTRICAL COOLING WITH GAS HEAT	48TC003093	A

Part Number:48FCFM07A1A5-0A0A0

ARI EER:	**11.00**	
IEER:	**15.0**	

Base Unit Dimensions

Unit Length:	**74.4**	in
Unit Width:	**46.6**	in
Unit Height:	**41.4**	in

Operating Weight

Base Unit Weight:	**562**	lb
High Heat:	**63**	lb
Total Operating Weight:	**625**	lb

Unit

Unit Voltage-Phase-Hertz:	**208-3-60**	
Air Discharge:	**Vertical**	
Fan Drive Type:	**Vane Axial**	
Actual Airflow:	**2100**	CFM
Site Altitude:	**0**	ft

Cooling Performance

Condenser Entering Air DB:	**95.0**	F
Evaporator Entering Air DB:	**80.0**	F
Evaporator Entering Air WB:	**67.0**	F
Entering Air Enthalpy:	**31.44**	BTU/lb
Evaporator Leaving Air DB:	**57.1**	F
Evaporator Leaving Air WB:	**56.2**	F
Evaporator Leaving Air Enthalpy:	**23.91**	BTU/lb
Gross Cooling Capacity:	**71.15**	MBH
Gross Sensible Capacity:	**52.00**	MBH
Compressor Power Input:	**5.27**	kW
Coil Bypass Factor:	**0.083**	

Heating Performance

Heating Airflow:	**2100**	CFM
Entering Air Temp:	**70.0**	F
Leaving Air Temp:	**122.9**	F
Gas Heating Input Capacity:	**120.0 / 150.0**	MBH
Gas Heating Output Capacity:	**96.0 / 120.0**	MBH
Temperature Rise:	**52.9**	F
Thermal Efficiency (%):	**80.0**	

Supply Fan

External Static Pressure:	**0.80**	in wg
Fan RPM:	**2198**	
Fan Power:	**1.14**	BHP
NOTE:	**Selected IFM RPM Range: 1596 - 2300**	

Selection includes construction throwaway filter into the base fan curve. This filter is not MERV Rated.

Electrical Data

Voltage Range:	**187 - 253**
Compressor #1 RLA:	**17.5**
Compressor #1 LRA:	**136**
Indoor Fan Motor Type:	**STD**
Indoor Fan Motor FLA (Total):	**9.2**
Combustion Fan Motor FLA (ea):	**0.48**
Power Supply MCA:	**33**

Power Supply MOCP (Fuse or HACR): **50**
Disconnect Size FLA: **32**
Disconnect Size LRA: **153**
Electrical Convenience Outlet: **None**
Outdoor Fan [Qty / FLA (ea)]: **1 / 1.5**

Control Panel SCCR: 5kA RMS at Rated Symmetrical Voltage

Acoustics

Sound Power Levels, db re 10E-12 Watts

	Discharge	Inlet	Outdoor
63 Hz	93.2	90.1	85.6
125 Hz	84.7	80.7	84.7
250 Hz	78.8	72.6	80.5
500 Hz	75.3	67.7	76.0
1000 Hz	72.3	69.6	72.4
2000 Hz	69.8	61.0	68.0
4000 Hz	65.5	54.1	62.8
8000 Hz	61.0	48.3	59.3
A-Weighted	78.7	73.4	79.0

Advanced Acoustics

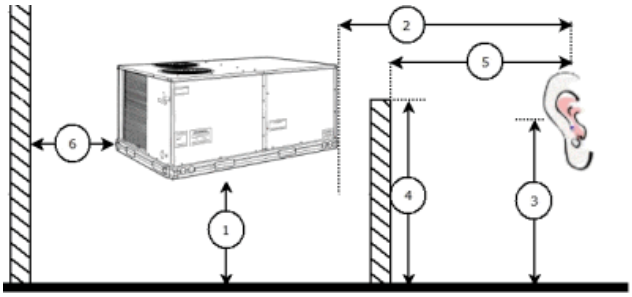

Advanced Accoustics Parameters

1. Unit height above ground: **30.0** ft
2. Horizontal distance from unit to receiver: **50.0** ft
3. Receiver height above ground: **5.7** ft
4. Height of obstruction: **0.0** ft
5. Horizontal distance from obstruction to receiver: **0.0** ft
6. Horizontal distance from unit to obstruction: **0.0** ft

Detailed Acoustics Information

Octave Band Center Freq. Hz	63	125	250	500	1k	2k	4k	8k	Overall
A	85.6	84.7	80.5	76.0	72.4	68.0	62.8	59.3	89.2 Lw
B	59.4	68.6	71.9	72.8	72.4	69.2	63.8	58.2	78.5 LwA
C	53.2	52.3	48.1	43.6	40.0	35.6	30.4	26.9	56.8 Lp
D	27.0	36.2	39.5	40.4	40.0	36.8	31.4	25.8	46.1 LpA

Legend
A Sound Power Levels at Unit's Acoustic Center, Lw
B A-Weighted Sound Power Levels at Unit's Acoustic Center, LwA

C Sound Pressure Levels at Specific Distance from Unit, Lp
D A-Weighted Sound Pressure Levels at Specific Distance from Unit, LpA

Calculation methods used in this program are patterned after the ASHRAE Guide; other ASHRAE Publications and the AHRI Acoustical Standards. While a very significant effort has been made to insure the technical accuracy of this program, it is assumed that the user is knowledgeable in the art of system sound estimation and is aware of the tolerances involved in real world acoustical estimation. This program makes certain assumptions as to the dominant sound sources and sound paths which may not always be appropriate to the real system being estimated. Because of this, no assurances can be offered that this software will always generate an accurate sound prediction from user supplied input data. If in doubt about the estimation of expected sound levels in a space, an Acoustical Engineer or a person with sound prediction expertise should be consulted.

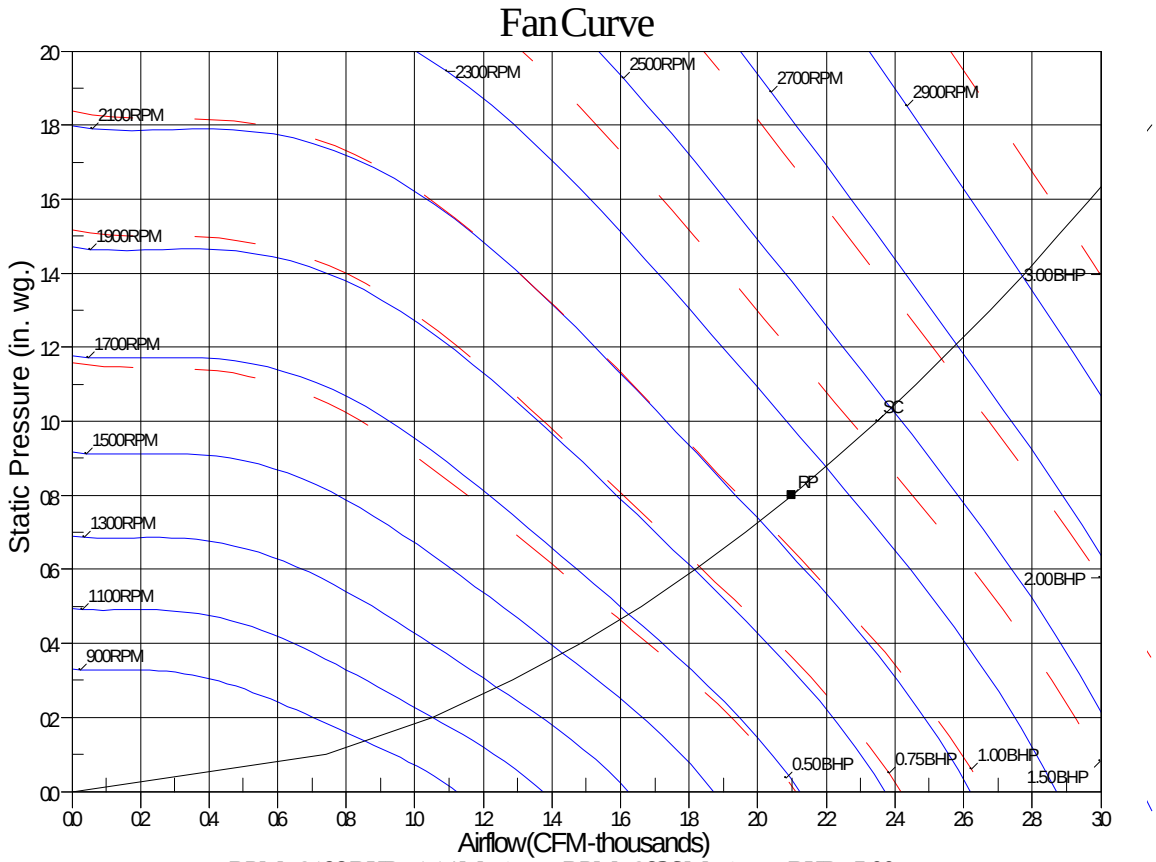

RPM=2198 BHP=1.14 Maximum RPM=2836 Maximum BHP=5.00
SC-System Curve RP-Rated Point